SDM120CT Single Phase Meter Quick Installation Guide

-Version 1.0

1. Scope

The following models of Solis inverters have integrated the export power limitation function as well as 24hour consumption monitoring function. To enable the functions,please refer to below installation guide to install the single phase meter and follow the inverter user manual to set the inverter settings.

2. Meter Installation

NOTE:
The meter has been preset for direct installation on site. No need to change any parameters on the meter.

WARNING:
Please disconnect or switch off the upstream and downstream electrical connection before conduct the meter installation.
Otherwise there will be risk of electric shock.

The Single phase meter

System drawing

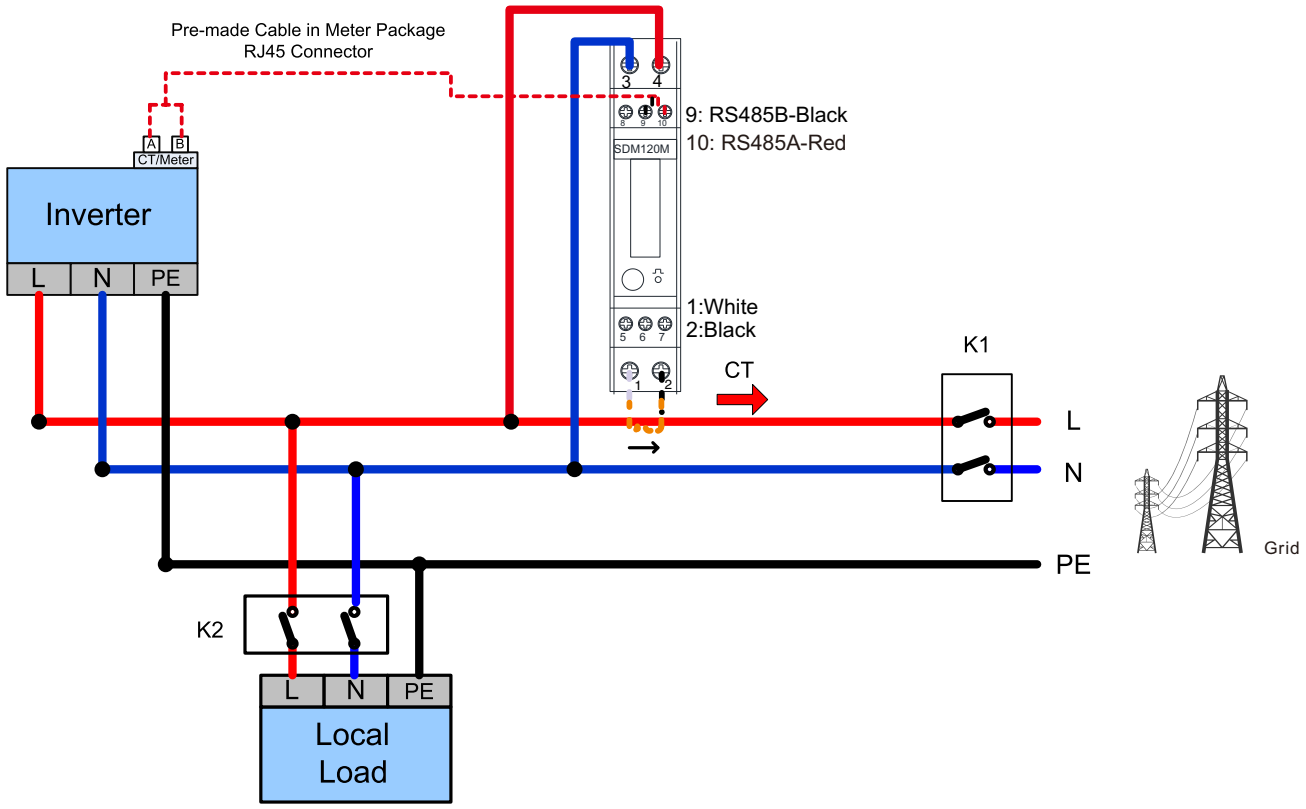

3. Meter Specification

Model Name	SDM120CT
Grid Topology	1P+N
Rated Voltage	230V
Input Current	100mA (External CT: 100A:100mA)
Accuracy	Voltage ±0.5% Current ±0.5% Power(P,Q,S) ±1% Active Energy ±1% Reactive Energy ±2%
Operating Temperature	-25℃~55℃
Relative Humidity	<95% (Non-condensing)
Dimension	118L*18W*64H (mm)